(No Model.)

J. P. BROWN.

LIFE PRESERVER.

No. 531,505. Patented Dec. 25, 1894.

Fig. 1.

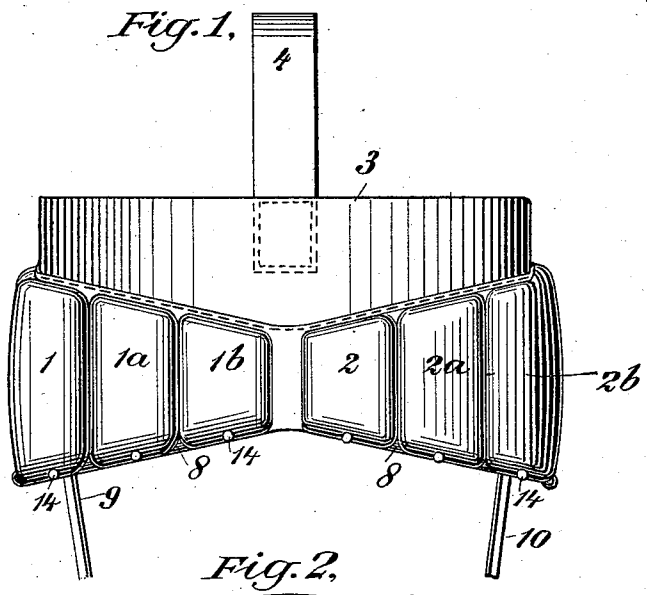

Fig. 2.

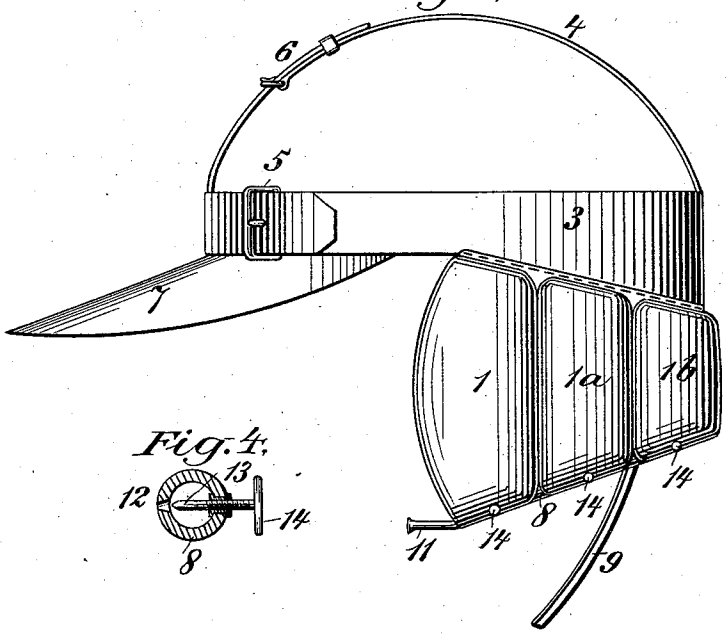

Fig. 4.

Fig. 3

Witnesses:-
D. N. Hayward
Warren W. Foster

Inventor:-
Jeanette P. Brown
by A. Parkerson
Atty.

THE NORRIS PETERS CO., PHOTO-LITHO., WASHINGTON, D. C.

UNITED STATES PATENT OFFICE.

JEANNETTE P. BROWN, OF SALT LAKE CITY, UTAH TERRITORY.

LIFE-PRESERVER.

SPECIFICATION forming part of Letters Patent No. 531,505, dated December 25, 1894.

Application filed June 5, 1894. Serial No. 513,565. (No model.)

To all whom it may concern:

Be it known that I, JEANNETTE P. BROWN, a citizen of the United States, residing at Salt Lake City, in the county of Salt Lake and Territory of Utah, have invented certain new and useful Improvements in Life-Preservers; and I do hereby declare the following to be a full, clear, and exact description of the invention, such as will enable others skilled in the art to which it appertains to make and use the same.

My invention is called the float rest.

The float rest is for the purpose of allowing one to float or swim with perfect rest, ease and entire safety. It consists of a life preserver at the base of the head on either side, fastened by a band going around the head with a visor to protect the eyes from the sun and light, protecting the ears from water getting in, and two or more pads, which form the life preserver, put around the head on either side (these to be inflated at pleasure of the wearer) the other straps going under the arms to keep it in place. The life preserver or head rest is to be made of rubber, duck or any other suitable material and will be adapted in its details of construction, to the water and place in which it is used.

In the drawings, Figure 1, is a rear view of the preferred form of my invention. Fig. 2, is a side view of the same. Fig. 3, is a plan view of the inflated air cushions, and Fig. 4, is a detail of the inflating tube and one valve.

Throughout the drawings like reference-figures refer to like parts.

1, and 2, are air cushions which are to be arranged one on either side of the neck or back of the head. 3, is the band to which they are attached. The buckle 5, connects the two ends of the band 3, together.

4, is a strap which goes over the top of the head and prevents the band 3, from dropping down.

6, is a buckle by which the length of strap 4, may be adjusted.

7, is a visor for protecting the eyes of the swimmer from the sun.

8, 8, are air tubes with valves for closing them.

9, and 10, are straps which may go under the arms or under the chin of the swimmer to keep the air cushions in place.

Each of the air cushions 1, and 2, is divided into several separate air tight compartments, 1, 1^a, 1^b, 2, 2^a, 2^b, &c. The tubes 8, connect each set of these separate air tight compartments with a common mouthpiece 11. Opposite the end of each separate compartment of the cushions is an opening 12, in the air tube 8, connecting with said compartment. This opening 12, may be closed or opened by the pointed valve spindle 13, which is controlled by the thumb screw 14, all as shown in Fig. 4.

In using my invention the air cushions or floats are adjusted under the back of the neck, or lower part of the back of the head and with the visor 7, over the eyes. The various straps are fastened to hold the air cushions in place. The swimmer can then float on his back with ease, the head being supported by the buoyancy of the air cushions.

The degree of buoyancy desired can be obtained by inflating more or less of the separate compartments 1, 1^a, 1^b, &c., of the air cushions. If the valve spindles 13, are withdrawn from all the openings 12, and the operator blows into the mouthpiece 11, it is evident that all the compartments and the air cushions on this side will be inflated. On closing all of the valves the compartments will all remain inflated and the highest degree of buoyancy will be secured. If one of the valves is partly opened, however, the air from its corresponding compartment may be partly or entirely expelled and the buoyancy thereby correspondingly decreased. An additional advantage of this construction is that if part of the cushion is punctured so that the air escapes from one of the compartments, the others remain inflated and operative and will afford the necessary buoyancy to prevent sinking.

Having, therefore, described my invention, what I claim as new is—

1. In a life preserver the combination of two or more separate air cushions, the bands to which they are attached, the head strap which holds said band up, and the additional straps for holding the cushions down in position, one of the lines of division between two of said separate air cushions being located at the back of the head substantially as described.

2. In a life preserver, the combination of

two or more separate air cushions; each air cushion being divided into separate air tight compartments, a common mouthpiece and tube connecting with each of the separate compartments of each air cushion, the openings from each of said compartments to the tube, and independently and positively operating valves for opening and closing said connections, substantially as described.

3. In a life preserver, the combination of two or more separate air cushions; each air cushion being divided into separate air tight compartments, a common mouthpiece and tube connecting with each of the separate compartments of each air cushion, the openings from each of said compartments to the tube, and independently and positively operating valves for opening and closing said connections, the band to which the air cushions are attached, the head straps which hold said band up and the additional straps for holding the cushions down in position, substantially as described.

In testimony whereof I affix my signature in presence of two witnesses.

JEANNETTE P. BROWN.

Witnesses:
H. HUNTER,
J. L. PERKES.